ENERGY SAVING

ES MAXI 80 | DN 40

Ibérica del Calor

Display alternates pump power consumption and flow data information

Simple to set with Press&Turn dial. The operating mode symbol lights up when in use

All the necessary inputs for the remote monitoring and control of the pump are included

APPLICATION

Hot-water heating systems of all kinds, closed cooling circuits, circulation in solar thermal and geothermal systems, for domestic and industrial circulation systems.

ENERGY EFFICIENCY INDEX

EEI ≤ 0,23 - Part 2*

MOTOR TECHNICAL DATA

Power supply	1x230 V (±10%), PE; Frequency: 50/60 Hz
Input power (P_1)	Min. 15W, Max. 280W
Input current (I_1)	Min. 0.20A, Max. 1.90A
Insulation class	F
Protection class	IP44
Temperature class	TF 110

PUMP TECHNICAL DATA

Ambient temperature	from +0°C to +40°C
Allowed liquid temperature	from -10°C to +110°C
Temperature range at max. ambient temperature	of 30°C = +30°C to +90°C of 40°C = +40°C to +110°C
Operating pressure	Max. 1.0 MPa - 10 bar
Minimum pressure on the intake opening	0.05 MPa (0.5 bar) at 80°C 0.15 MPa (1.5 bar) at 95°C
Maximum relative humidity	≤ 80%
Sound pressure level	< 45 dB(A)
Low Voltage directive (2006/95/CE)	Standard used: EN 60335-1, EN 60335-2-51
EMC Directive (2004/108/CE)	Standard used: EN 61000-6-2, EN 61000-6-3
Ecodesign Directive (2009/125/CE)	Standard used: EN 16297-1, EN 16297-2
Inputs/Outputs	Modbus RTU, 0-10VDC, Start/Stop signal, dual function, general fault signal

TYPE KEY

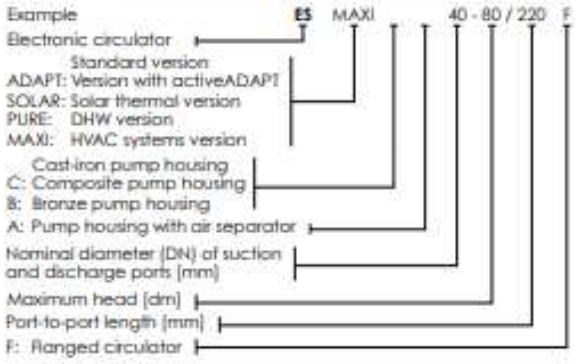

* The benchmark for most efficient circulators is EEI ≤ 0,20.

PERFORMANCE CURVES AND PUMP SETTINGS

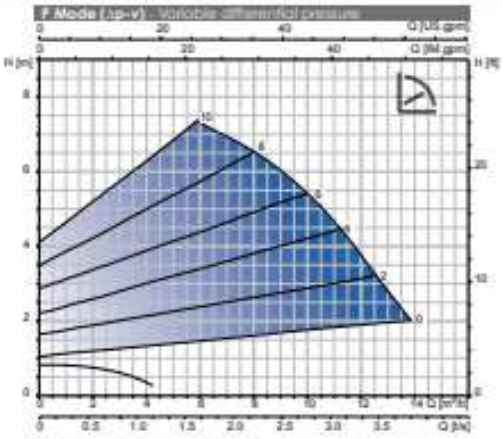

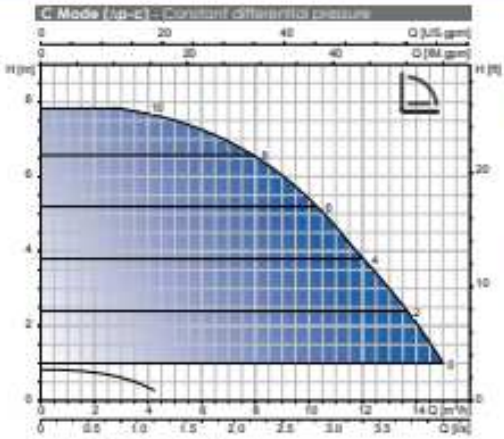

Select program items and confirm parameters by pressing the button

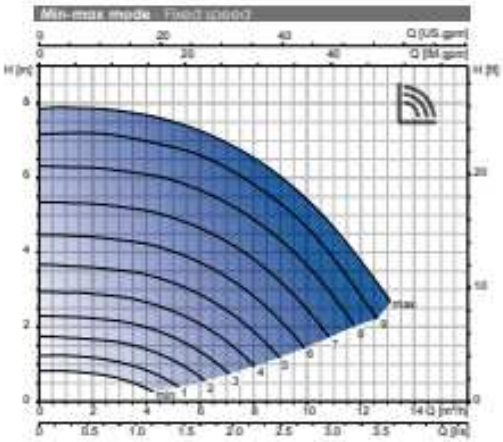

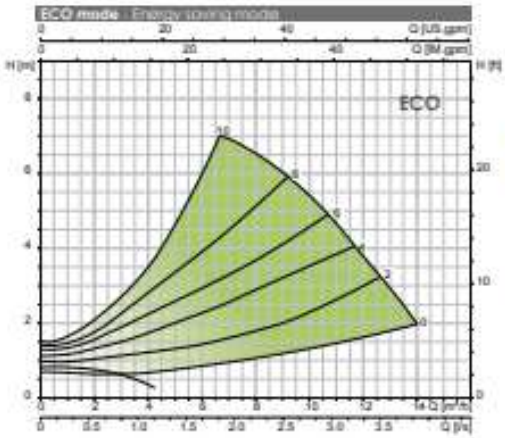

Set the parameters turning the button

MATERIALS

MODEL	Pump housing	Impeller	Shaft	Bearing	Rotor can
ES MAXI 80	Cast iron EN-GJL-200 with cataphoretic coating (KTL)	Stainless steel/ composite	Stainless steel 1.4304	Ceramics/carbon (metal impregnated)	Stainless steel 1.4301

DIMENSIONS, WEIGHTS

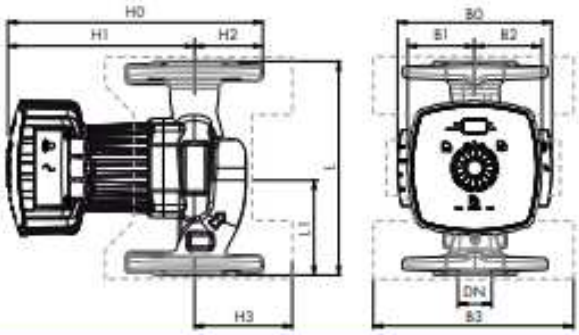

MODEL	CONNECTION	DIMENSIONS [mm]										WEIGHTS [Kg]	
	DN	L	L1	B0	B1	B2	B3	H0	H1	H2	H3	Net	Gross
ES MAXI 40-80/220 F	40	220	120	160	70	70	231	325	255	70	111	11,08	14,20